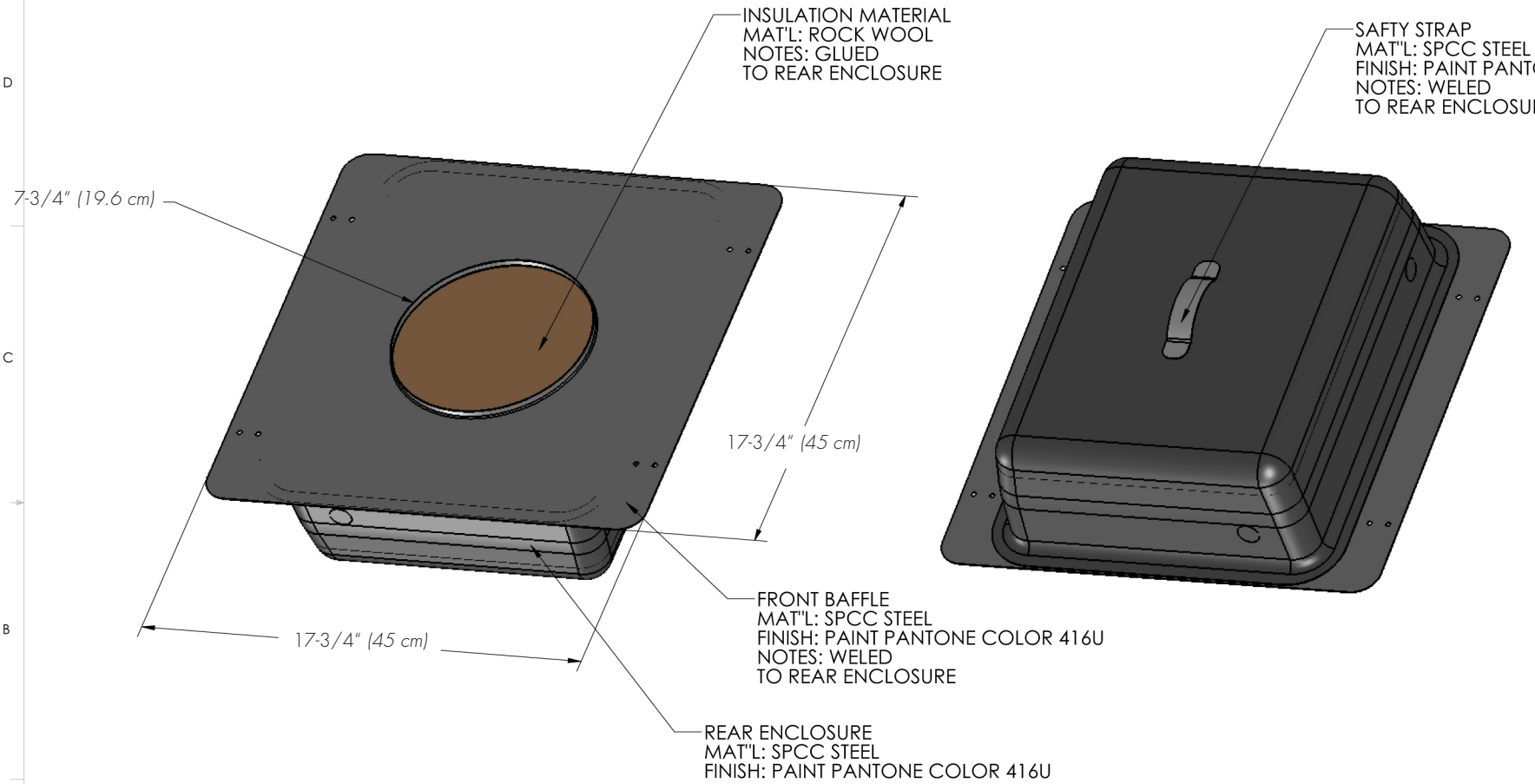

INCLUDED IN BOX
ARLINGTON PART#: 38AST
www.aifittings.com

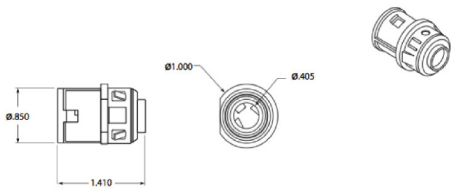

PARTID: 1090000013
PRODUCT DESCRIPTION: FBX-60 FIRE RATED BACK BOX
REVISION NUMBER: REV 0

SEE SHEET 2OF 2
FOR MORE DETAIL

SIZE	Name	REV
B	FBX-60 FIRE RATED BACK BOX	0
SCALE: 1:4	SHEET 1 OF 2	

Paradigm®

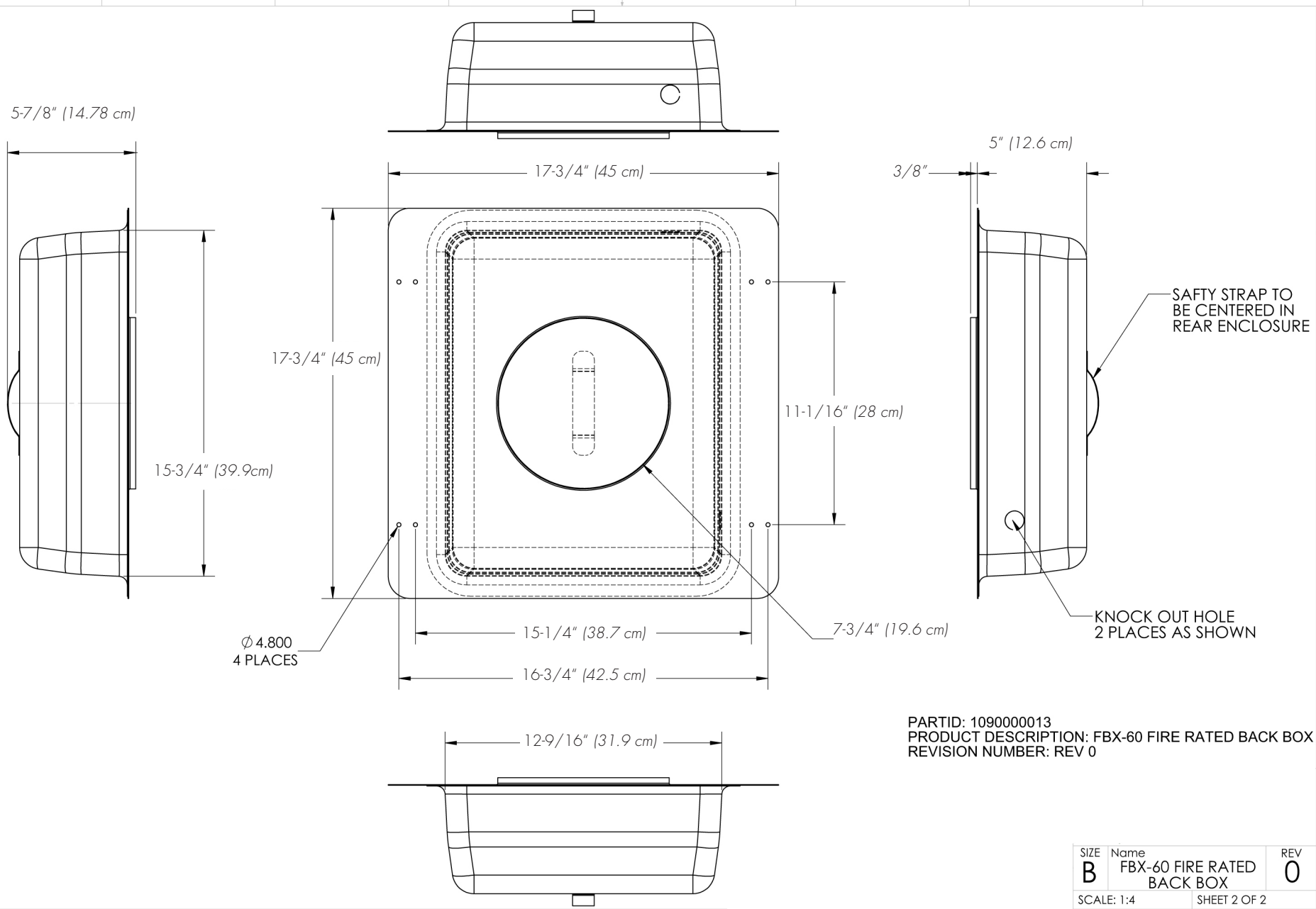

PARTID: 1090000013
PRODUCT DESCRIPTION: FBX-60 FIRE RATED BACK BOX
REVISION NUMBER: REV 0

SIZE	Name	REV
B	FBX-60 FIRE RATED BACK BOX	0
SCALE: 1:4	SHEET 2 OF 2	

Paradigm®